CODICE CODE	comp. X	comp. Y	b	m	h	l	Gomma Rubber	Durezza/Hard. Shore A
2010AM61616EPDM45	PMM20M616s	PMM20M616s	10	M6	16	16	EPDM	45
2020AM61616EPDM45	PMM20M616s	PMM20M616s	20	M6	16	16	EPDM	45
2020AM61212NR55	PMM20M612s	PMM20M612s	20	M6	12	12	NR	55
2020AM61212NR40	PMM20M612s	PMM20M612s	20	M6	12	12	NR	40
2020AM6168NR40	PMM20M616s	PMM20M68s	20	M6	16	8	NR	40
2020AM61012NR40	PMM20M610s	PMM20M612s	20	M6	10	12	NR	40
2020AM61612NR40	PMM20M616s	PMM20M68s	20	M6	16	12	NR	40
2020AM61616NR35	PMM20M616s	PMM20M616s	20	M6	16	16	NR	35
2020AM61616NR40	PMM20M616s	PMM20M616s	20	M6	16	16	NR	40
2020AM61616NR45	PMM20M616s	PMM20M616s	20	M6	16	16	NR	45
2020AM61414NR55	PMM20M614s	PMM20M614s	20	M6	14	14	NR	55
2020AM61616NR55	PMM20M616s	PMM20M616s	20	M6	16	16	NR	55
2020AM61616NR60	PMM20M616s	PMM20M616s	20	M6	16	16	NR	60
2025AM61016NR40	PMM20M610s	PMM20M616s	25	M6	10	16	NR	40
2025AM61212NR55	PMM20M612s	PMM20M612s	25	M6	12	12	NR	55
2025AM61212NR60	PMM20M612s	PMM20M612s	25	M6	12	12	NR	60
2025AM61414NR50	PMM20M614s	PMM20M614s	25	M6	14	14	NR	50
2025AM61616NR35	PMM20M616s	PMM20M616s	25	M6	16	16	NR	35
2025AM61616NR40	PMM20M616s	PMM20M616s	25	M6	16	16	NR	40
2025AM61616NR55	PMM20M616s	PMM20M616s	25	M6	16	16	NR	55
2025AM61616NR60	PMM20M616s	PMM20M616s	25	M6	16	16	NR	60
2025AM61616NR70	PMM20M616s	PMM20M616s	25	M6	16	16	NR	70
2025AM61818NR35	PMM20M618s	PMM20M618s	25	M6	18	18	NR	35
2025AM61818NR70	PMM20M618s	PMM20M618s	25	M6	18	18	NR	70
2030AM61212NR45	PMM20M612s	PMM20M612s	30	M6	12	12	NR	45
2030AM61212NR55	PMM20M612s	PMM20M612s	30	M6	12	12	NR	55
2030AM61616NR55	PMM20M616s	PMM20M616s	30	M6	16	16	NR	55
2035AM61616NR55	PMM20M616s	PMM20M616s	35	M6	16	16	NR	55

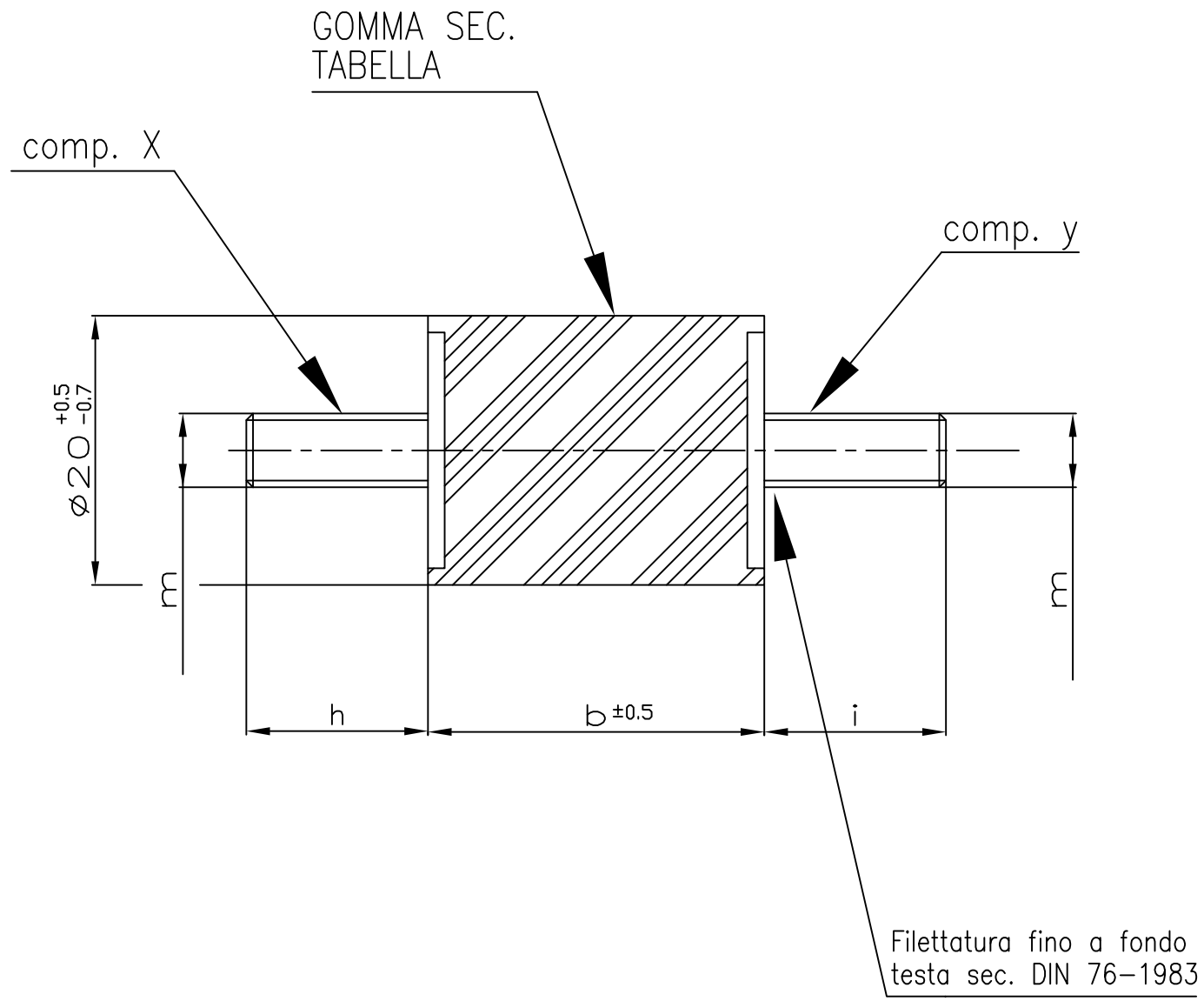

POSSIBILE PRESENZA PEDUNCOLO
DI INIEZIONE MAX. 2 mm
MAXIMUM ADMITTED LENGTH
OF INJECTION POINT 2 mm

Apice	Data Date	Firma Signature	DESCRIZIONE DESCRIPTION	Formato
00	23.09.22	A.C.	RIMESSO IN TAVOLA	A3

PATRINI GIACOMO

Scala / Scale 1:1

TOLLERANZE GENERALI: EN22768-C; RUBBER: ISO3302-M4
OVERALL TOLERANCES: EN22768-C; RUBBER: ISO3302-M4

MATERIALE / MATERIAL: –

TRATTAMENTO SUPERFICIALE PARTI METALLICHE
SURFACE TREATMENT OF METAL COMPONENTS
Fe Zn 7 II sec. FIAT 9.57405

Data di origine / Date of issue: 23/09/2022
Disegnato / Drawn: A.C.
Controllato / Controlled: E.A.
Visto / Seen: W.P.

DENOMINAZIONE / DESCRIPTION: ANTIVIBRANTE MASCHIO-MASCHIO

N.DISEGNO / DRAWING No.: 00A 020

Apice: 00

IL PRESENTE DISEGNO E' PROPRIETA' DELLA PATRINI GIACOMO SRL E SENZA PERMESSO SCRITTO DELLA STESSA NON POTRA' ESSERE COMUNQUE UTILIZZATO PER LA COSTRUZIONE
THIS DRAWING IS PROPERTY OF PATRINI GIACOMO SRL AND CANNOT BE USED FOR MANIFACTURING WITHOUT WRITTEN APPROVAL